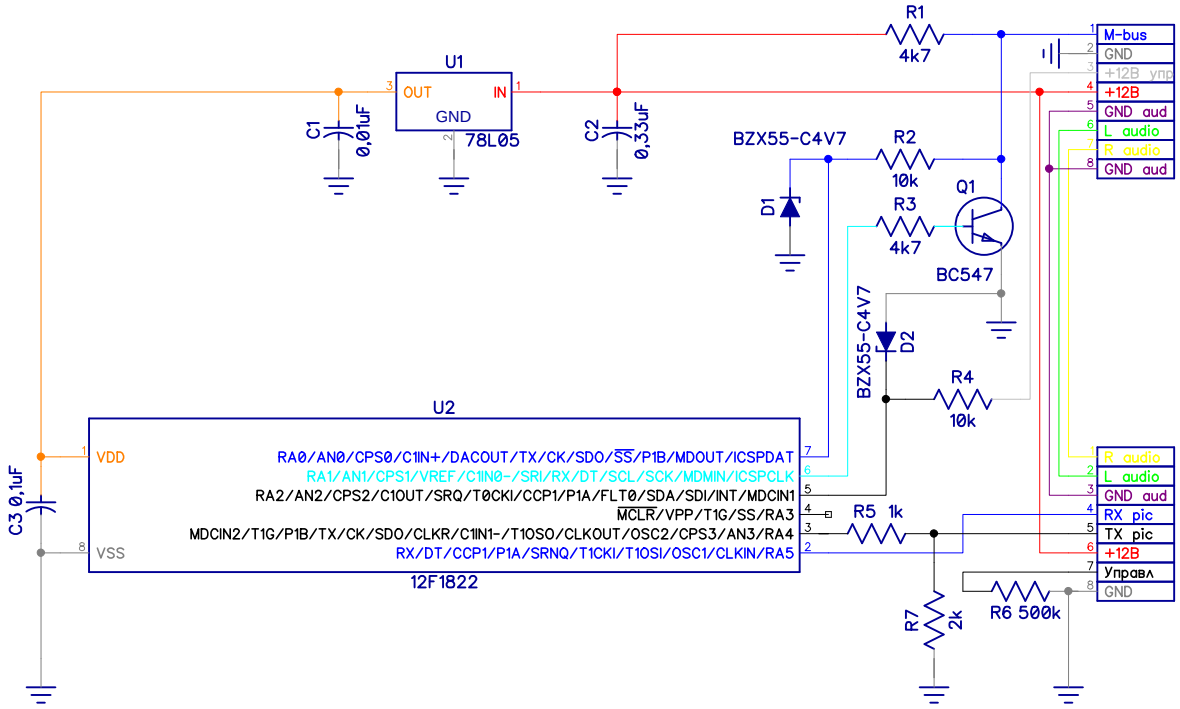
U1
OUT
IN
GND
78L05
C1
0,01uF
C2
0,33uF
R1
4k7
BZX55-C4V7
R2
10k
D1
R3
4k7
Q1
BC547
BZX55-C4V7
D2
R4
10k
U2
VDD
VSS
C3 0,1uF
RA0/AN0/CPS0/C1IN+/DACOUT/TX/CK/SDO/SS/P1B/MDOUT/ICSPDAT
RA1/AN1/CPS1/VREF/C1IN0-/SRI/RX/DT/SCL/SCK/MDMIN/ICSPCLK
RA2/AN2/CPS2/C1OUT/SRQ/T0CKI/CCP1/P1A/FLT0/SDA/SDI/INT/MDCIN1
MCLR/VPP/T1G/SS/RA3
MDCIN2/T1G/P1B/TX/CK/SDO/CLKR/C1IN1-/T1OSO/CLKOUT/OSC2/CPS3/AN3/RA4
RX/DT/CCP1/P1A/SRNQ/T1CKI/T1OSI/OSC1/CLKIN/RA5
12F1822
R5 1k
R7 2k
R6 500k
M-bus
GND
+12В
GND aud
L audio
R audio
GND aud
R audio
L audio
GND aud
RX pic
TX pic
+12В
Управл
GND

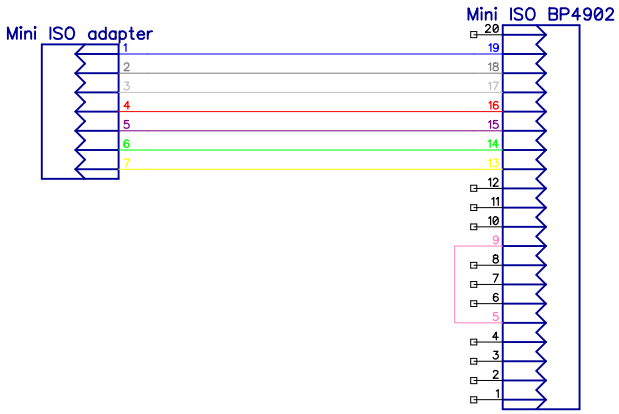
Mini ISO adapter
Mini ISO BP4902

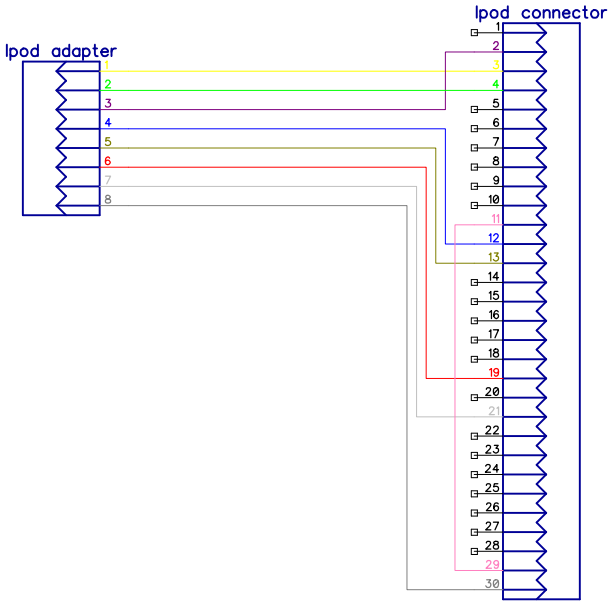
Ipod adapter
Ipod connector